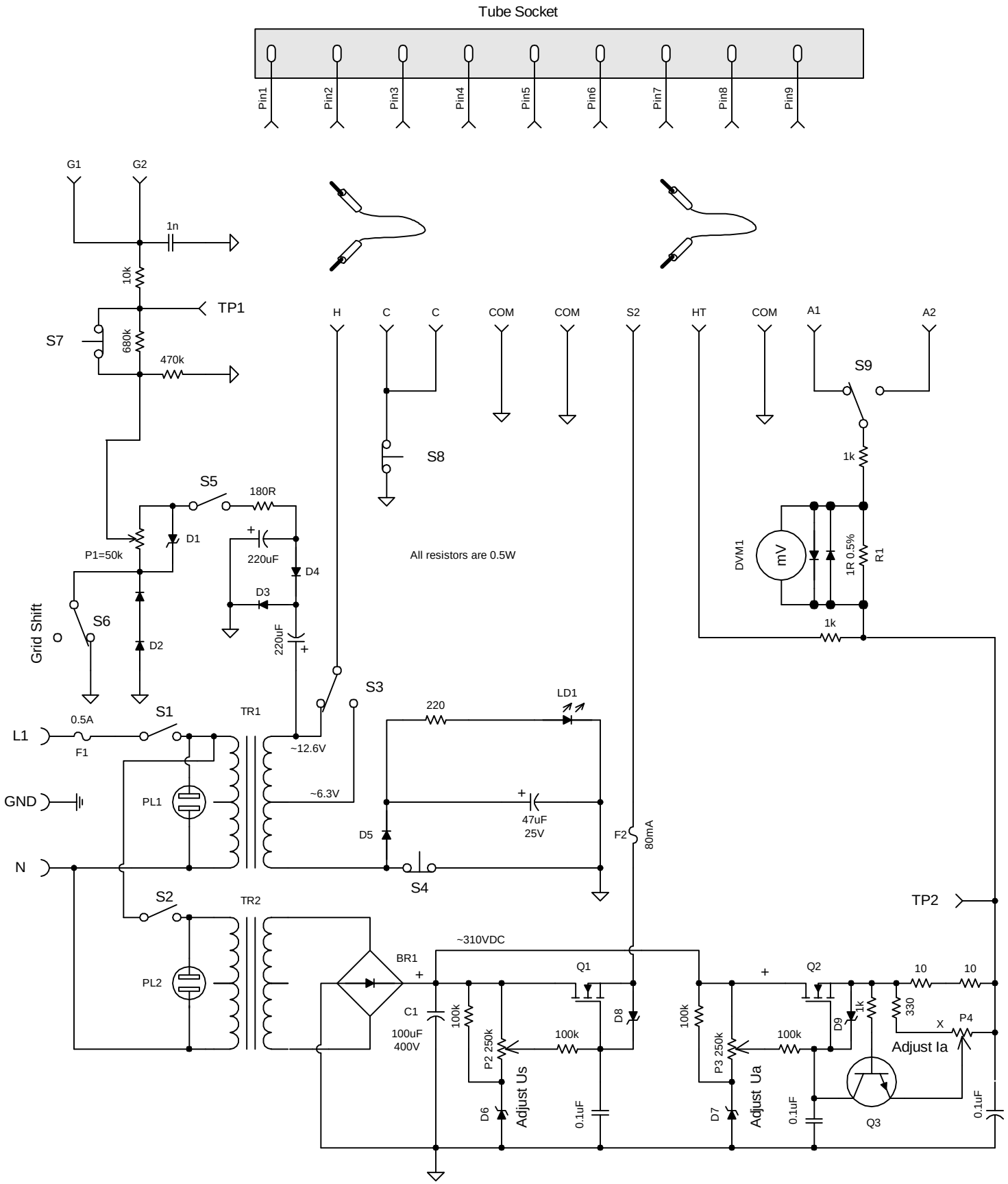
Tube Socket
Pin1
Pin2
Pin3
Pin4
Pin5
Pin6
Pin7
Pin8
Pin9
G1
G2
1n
10k
TP1
S7
680k
470k
H
C
C
COM
COM
S2
HT
COM
A1
A2
S9
S8
1k
S5
180R
D1
P1=50k
220uF
D4
D3
All resistors are 0.5W
DVM1
mV
1R 0.5%
R1
1k
Grid Shift
S6
D2
220uF
S3
LD1
220
S1
0.5A
F1
TR1
L1
~12.6V
~6.3V
GND
PL1
47uF
25V
D5
F2
80mA
N
S4
S2
TR2
TP2
~310VDC
BR1
PL2
Q1
Q2
10
10
C1
100uF
400V
100k
P2 250k
100k
D8
100k
P3 250k
100k
D9
1k
330
X
P4
Adjust Ia
D6
Adjust Us
0.1uF
D7
Adjust Ua
0.1uF
Q3
0.1uF
© Lighthouse Electric
Tube Tester Jr. V.1b
Drawn by:
CB
File Name:
TT-Jr.
Date:
1/02/16